MESSAGE SYSTEMS

TABLE OF CONTENTS

page

OVERHEADCONSOLE
DESCRIPTION 1
STANDARDPROCEDURE 4
COMPASS CALIBRATION. 4
COMPASS VARIATIONADJUSTMENT 4
COMPASS DEMAGNETIZING. 5
REMOVAL 6
DISASSEMBLY 7
ASSEMBLY 7
INSTALLATION. 8
SPECIAL TOOLS 8
COMPASS/MINI-TRIP COMPUTER
DESCRIPTION 8
OPERATION 9
DIAGNOSISANDTESTING 10
COMPASSMINI-TRIPCOMPUTER. 10
REMOVAL 11
INSTALLATION 11
AMBIENTTEMPSENSOR
DESCRIPTION 11
OPERATION. 11
DIAGNOSISANDTESTING 12
AMBIENTTEMPERATURE SENSOR 12
REMOVAL 12
INSTALLATION 13

OVERHEAD CONSOLE

DESCRIPTION

Twodifferent overhead console units are available factory-installed options on this model, base or premium. The base overhead console unit features a garage dooropener storage bin, a sunglasses storage bin and two reading and courtesy lamps. The premium overhead console has all of thefeatures of the base unit, but adds a compass mini-trip computer. See the owner's manual in the vehicle glove box for more information onthe features, use and operation of all of the overhead console components and systems. Refer to **OverheadConsole** intheContentsof Wiring Diagrams for complete circuit diagrams.

The premium overhead console (Fig. 1) includes two front-mounted reading and courtesy lamps, a garage door opener storage bin, and a sunglasses storage bin. The premium overhead console includes a compass mini-trip computer. The base overhead console uses the same overhead console housing, but has a computer cover plug installed in place of the compass mini-trip computer display module lens and push buttons.

The rearoftheoverheadconsoleis secured to two rear mounting holes in the inner roof panel by two plastic hookformations that are integral to the overhead console housing. The front of the overhead console is secured to thetwofront mountingholes ofthe inner roof panel by two plastic latches that are integraltotheoverheadconsolehousing.Asingleelectrical connection joins the overhead console wire harness to the roof wire harness for both the base and premium overhead console units.

Following are general descriptions of the major components used in the overhead console. See the owner's manual in the vehicle glove box for more information on the use and operation of the various overhead console features.

GARAGE DOOR OPENER STORAGE BIN

A compartment near the front of theoverhead console is designed to hold most garage door opener remote control transmitters. The transmitter is mounted within the compartment with an adhesive-backed hook and loop fastener patch and, when the compartment isclosed,apushbuttoninthecenterof the compartment door is depressed to actuate the transmitter.

A transmitter mounting kit including the adhesive-backed hook and loop fastener material is available for service. The garage door opener storage bin door and the push button with three assorted length adapter pegs are also available for service replacement.

The garage dooropener storage compartment door is opened by pressing the integral latch towards the front of the vehicle. When the compartment door is opened, the push button unit is removed from the compartment by squeezing the latch tabs and pulling the unit downward. With the push button removed, the garage door opener can be installed in the compartment using the adhesive-backed hook and loop fastener material provided.

OVERHEAD CONSOLE (Continued)

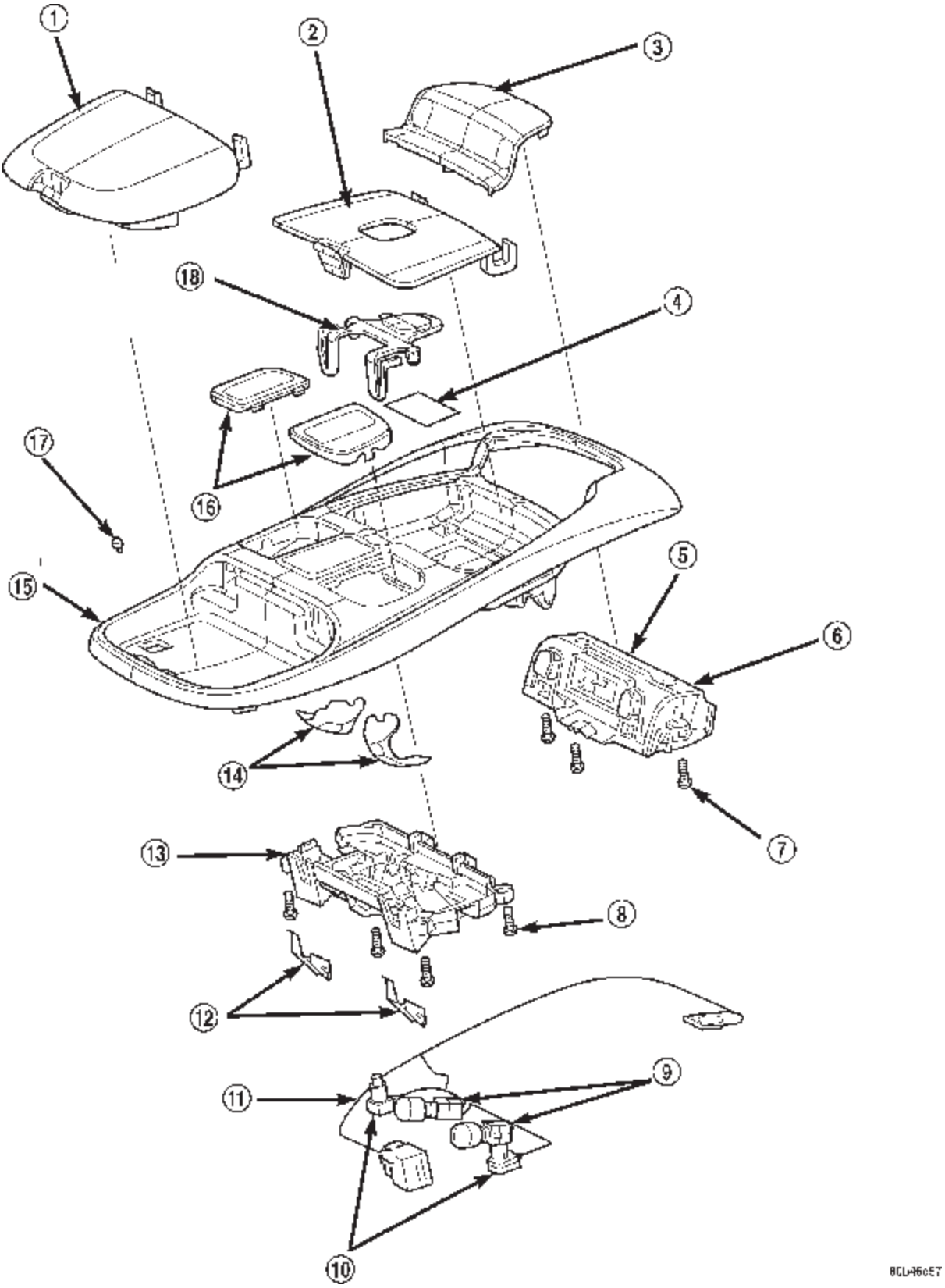

Fig. 1 Overhead Console

OVERHEAD CONSOLE (Continued)

1-SUNGLASSESSTORAGEBIN
2-GARAGEDOOROPENERSTORAGEBINDOOR
3-COMPUTERLENSORCOVERPLUG
4-HOOKANDLOOPFASTENER
5-SECURITYINDICATORLAMP
6-COMPASSMINI-TRIPCOMPUTERMODULE
7-SCREW(3)
8-SCREW(4)
9-BULBHOLDERS
10-SWITCHES
11-WIREHARNESS
12-SPRINGS(2)
13-READINGANDCOURTESYLAMPHOUSING
14-REFLECTORS
15-OVERHEADCONSOLEHOUSING
16-LENSES
17-BUMPER
18-GARAGEDOOROPENERPUSHBUTTON

With the transmitter mounted in the storage bin, adapter pegs located onthegaragedooropenerpush button unit are selected and mounted on oneoftwo posts on the back side of the push button. The combination of the adapter peg length and the push button post location must be suitable to depress the button of the transmitter when the push button in the center of thegarage door opener storage bin door is depressed.When theproper combination has been selected, the push button is reinstalled in the compartment and the compartment door is closed.

SUNGLASSSTORAGEBIN

A sunglasses storage bin is included in the overheadconsole. Thestorage bin is locatednear the rear of theoverhead consoleand isheldintheclosedposition by a latch that is integral to the storage bin door. The interiorofthebinislinedwithafoamrubber padding material to protect the sunglasses from being scratched. Dampening springs that are located on the back of the overhead console reading and courtesy lamp housing contact the hinges of the sunglasses storage bin for a smooth opening action.

The sunglasses storage bin anddoor unit is available for service replacement. The hinge dampening springs are servicedas a unitwiththeoverhead console reading and courtesy lamp housing.

The sunglasses storage bin is opened by pressing the latch on the rear edge of the door towards the front ofthevehicle,thenpullingthebindownwardto the open position. The integral latch on the sunglasses bin door will automatically engage when the bin is closed. Seetheowner'smanualin the vehicle glove box for moreinformation on the use and operation of the sunglasses storage bin.

COMPASS

While in the compass/temperature mode, the compasswilldisplay the direction in which the vehicleis pointed using the eight major compass headings (Examples: north is N, northeast is NE), along with the outside ambient temperature. When the compass unit is placed in the compass/compass in degrees mode, the compass will display the direction the vehicle is heading using the eight major compass headings and in degrees (0 to 359 degrees).North is 0 degrees, East is 90 degrees, South is 180 degrees andWestis270degrees.Itwillnotdisplaytheheadings in minutes or seconds.

The self-calibrating compass unit requires no adjusting in normal use.Thecompassunitwillcompensate for magnetism the body of the vehicle may acquire during normal use. However, avoid placing anything magnetic directly on the roof of the vehicle. Magnetic mounts for an antenna, a repair order hat, or a funeral procession flag can exceed the compen sating ability of the compass unit if placed on the roof panel. If the vehicle roof should become magnetized, the demagnetizing and calibration procedures foundinthisgroupmayberequiredtorestoreproper compass operation.

THERMOMETER

The thermometer displays the outside ambient temperature in whole degrees. The temperature display can be changed from Fahrenheit to Celsius using the U.S./Metric push button. The displayed temperature is not an instant reading of conditions, but an average temperature. It may take the thermometer display several minutes to respond to a major temperature change, such as driving out of a heated garage into winter temperatures.

When the ignition switch is turned to the Off position, the last displayed temperature reading stays in the thermometer unit memory. When the ignition switch is turned to the On position again, the thermometer will display the memory temperature if the engine coolant temperature is above about 43° C (109° F). If the engine coolant temperature is below about 43° C (109° F), the thermometer will display the actual temperature sensed by the ambient temperature sensor. The thermometer temperature display update interval varies with the vehicle speed; therefore, if the temperature reading seems inaccurate, drive the vehicle for at least three minutes

OVERHEAD CONSOLE (Continued)

while maintaining a speed of 48 kilometers-per-hour (30 miles-per-hour) or higher.

The thermometer function is supported by an ambient temperature sensor. The sensor is mounted outside the passenger compartment near the front and center of the vehicle, and is hard wired to the module.Theambienttemperature sensor is available as a separate service item.

STANDARD PROCEDURE - COMPASS CALIBRATION

CAUTION: Donotplaceanyexternal magnets, such as magnetic roof mount antennas,inthevicinityof the compass. Do not use magnetic tools when servicing the overhead console.

The electronic compass unit features a self-calibrating design, which simplifies the calibration procedure. This feature automatically updates the compasscalibrationwhile the vehicleis beingdriven. This allows thecompassunittocompensateforsmall changes in the residual magnetism that the vehicle may acquire duringnormal use. If the compassreadings appear to be erratic or out of calibration, perform the following calibration procedure. Also, new service replacement compass mini-trip computer modules must have their compass calibrated using this procedure. Do not attempt to calibrate the compass near large metal objects such as other vehicles, large buildings, or bridges; or, near overhead or underground power lines.

(1) Start the engine. If the compass/temperature data is not currently being displayed, momentarily depress and release the Step push button to step through the display options until you have reached the compass/temperature display.

(2) Depress both the U.S./Metric and the Step push buttons at the same time for more than six seconds,until"CAL"appearsinthedisplay,thenrelease both push buttons. The "CAL" in the display indicates that the compass is in the calibration mode.

(3) Drive the vehicle on a level surface, at least fifty feet away from large metal objects and power lines, in all four compass directions, such as driving aroundacityblockseveraltimesordrivingintwoto three complete circles at a slow to medium speed.

(4) When the calibration is successfullycompleted, "CAL" will disappear from the display and normal compass mini-trip computer operation will resume.

NOTE: If the"CAL" messageremainsinthe display, either there is excessive magnetism near the compass, or the unit is faulty. Repeat the calibration procedure at least one more time.

NOTE: If the wrongdirection is stillindicated in the compass display, the area selected for calibration may be too closetoastrongmagneticfield.Repeat the calibrationprocedure in another location.

STANDARD PROCEDURE - COMPASS VARIATION ADJUSTMENT

Compass variance, also known as magnetic declination, is the difference in angle between magnetic north and true geographic north. In some geographic locations, the difference between magnetic and geographic north is great enough to cause the compass to give false readings. If this problem occurs, the compass variance must be set. There are two methods that can be used to enter this information into the compass mini-trip computer module. They are the zonemethodandthe direct method.

ZONE METHOD

(1) Using the Variance Settings map, find your geographic location and note the zone number (Fig. 2).

(2) Turn the ignition switch to the On position. If the compass/temperature data is not currently being displayed, momentarilydepressandrelease the Step push button to step through the display options until you have reached the compass/temperature display.

(3) Depress both the U.S./Metric and the Step push buttons at the same time and hold them down for more than 100 milliseconds, but not more than one second. The compass mini-trip computer will enter the variation adjustment mode and "VAR" along with the current variance zone will appear in the display.

(4) Momentarily depress and release the Steppush button to step through the zone numbers, until the zone number for your geographic location appears in the display.

(5) After five seconds, the displayed zone willautomatically be set in the compass mini-trip computer module memory and normal operation will resume.

(6) Confirm that the correct directions are now indicated by the compass.

DIRECT METHOD

(1) Turn the vehicle so it is headed in either the north or southdirection. The vehicle must be headed within 45degreesof north or southforthisprocedure to work. The vehicle may be moving orstationary.

(2) Turn the ignition switch to the On position. If the compass/temperature data is not currently being displayed, momentarilydepressandrelease the Step push button to step through the display options until you have reached the compass/temperature display.

OVERHEAD CONSOLE (Continued)

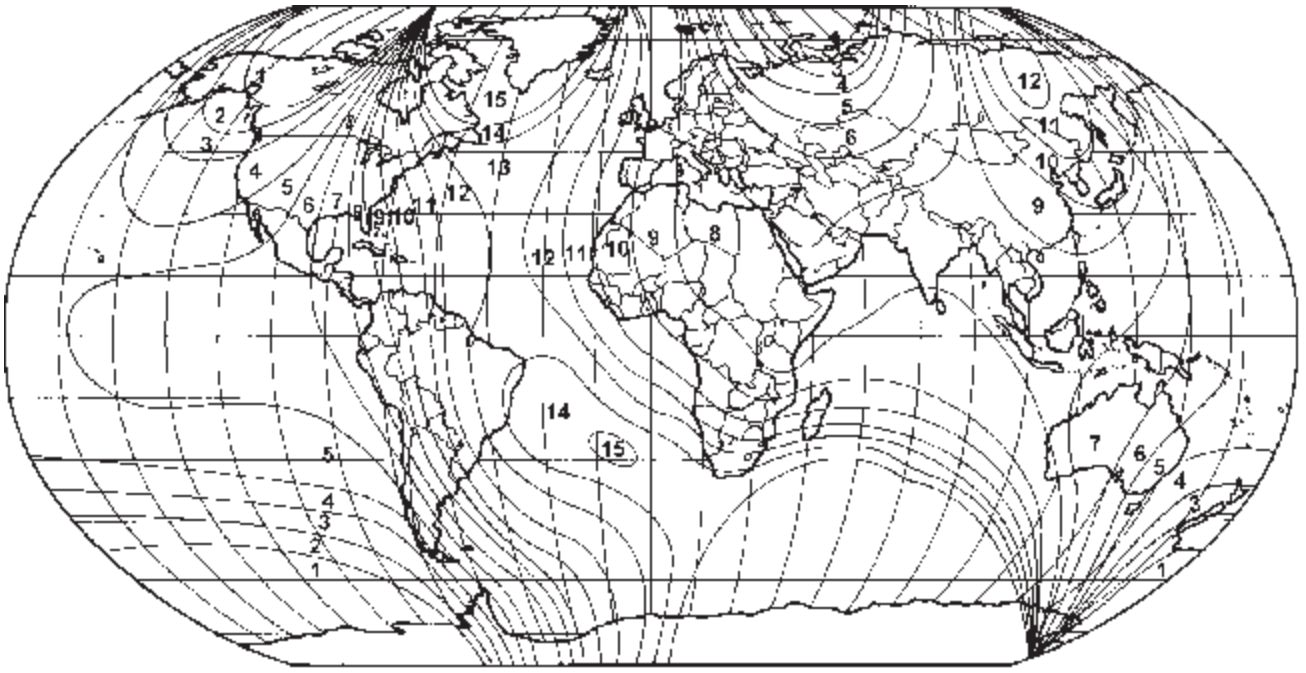

Fig. 2 Variance Settings

(3) Depress both the U.S./Metric and the Step push buttons at the same time and hold them down for more than 100 milliseconds, but not more than one second. The compass mini-trip computer will enter the variation adjustment mode and "VAR" along with the current variance zone will appear in the display.

(4) Within the next five seconds, momentarily depress andrelease theU.S./Metric push button.The variance zone will automatically be set in the compass mini-trip computermodule memory and normal operation will resume.

(5) If the "VAR" in the displayflashes twice before the compass mini-trip computer module resumes normaloperation, thenewvariancezonesetting wasnot accepted. Reorient the vehicle so it is headed within 45 degrees of north or south and repeat this procedure.

STANDARD PROCEDURE - COMPASS DEMAGNETIZING

A degaussing tool (Special Tool 6029) is used to demagnetize, or degauss, the overhead console forward mounting screw and the roof panel above the overhead console. Equivalent units must be rated as continuous duty for 110/115 volts and 60 Hz. They must also haveafieldstrengthofover350gauss at 7 millimeters (0.25 inch) beyond the tip of the probe.

To demagnetize the roof panel and the overhead console forwardmounting screw, proceed as follows:

(1) Be certain thattheignitionswitchisintheOff position, before you begin the demagnetizing procedure.

(2) Connect the degaussing tool to an electrical outlet, while keeping the tool at least 61centimeters (2 feet) away from the compass unit.

(3) Slowly approach the head of the overhead console forward mounting screw with the degaussing tool connected.

(4) Contact the head of the screw with theplastic coated tip of the degaussing tool for about two seconds.

(5) With the degaussing tool still energized, slowly backit away fromthescrew.Whenthetipofthetool is at least 61 centimeters (2 feet) from the screw head, disconnect the tool.

(6) Place a piece of paper approximately 22 by 28 centimeters(8.5by11inches),orientedonthevehicle lengthwise from front to rear, on the center line of the roof at the windshield header (Fig. 3). The purpose of the paper is to protect the roof panel from scratches, and to define the area to be demagnetized.

(7) Connect the degaussing tool to an electrical outlet, while keeping the tool at least 61centimeters (2 feet) away from the compass unit.

(8) Slowly approach the center line of the roof panel at the windshield header, with the degaussing tool connected.

(9) Contact the roof panel with the plastic coated tip ofthedegaussing tool. Be sure that the template

OVERHEAD CONSOLE (Continued)

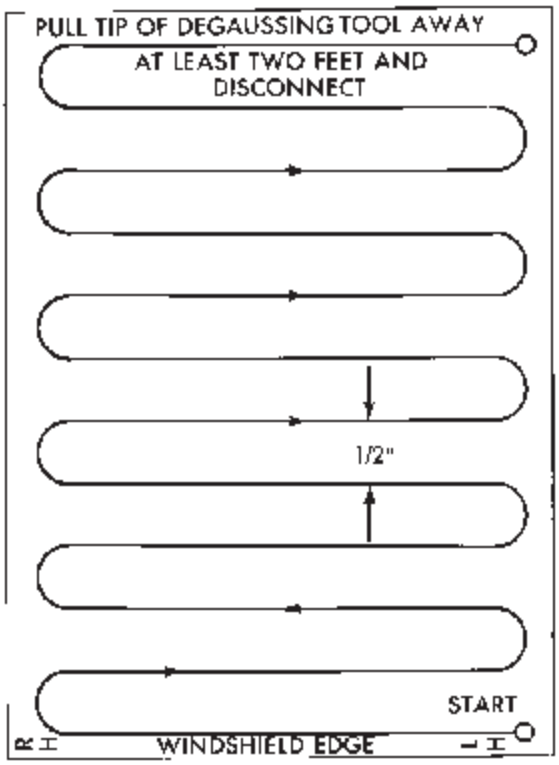

Fig. 3 Roof Demagnetizing Pattern

is in placeto avoidscratchingtheroof panel. Using a slow, back-and-forth sweeping motion, and allowing 13 millimeters (0.50 inch) between passes, movethe tool at least 11 centimeters (4 inches) toeachsideof the roof center line, and 28 centimeters (11 inches) back from the windshield header.

(10) With the degaussing tool still energized, slowly back it away from the roof panel. When the tip of the tool is at least 61 centimeters (2 feet)from the roof panel, disconnect the tool.

(11) Calibrate the compass and adjustthecompass variance. Refer to **Compass Variation Adjustment** and **Compass Calibration** in the Standard Proceduressection of this group for the procedures.

REMOVAL

(1) Disconnect and isolate the battery negative cable.

(2) Open the garage door opener storage bin door and locate the two overhead console latch tabs near the front of the bin (Fig. 4).

(3) While pulling gently downward on the front of the overhead console, push the latch tabs forward until each latch is disengaged from its receptacle in the inner roof panel.

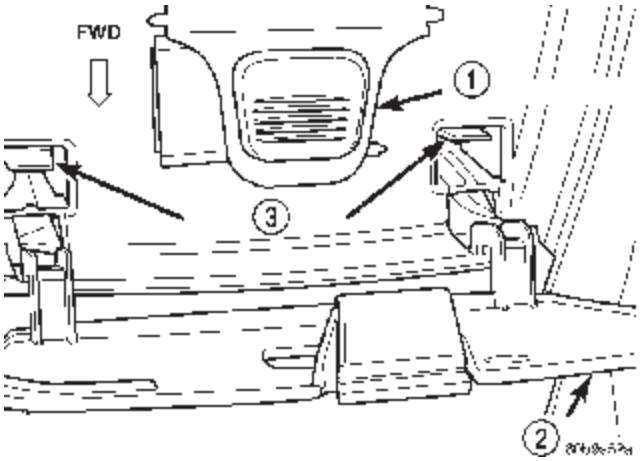

Fig. 4 Overhead Console Latch Tabs

1-PUSHBUTTON
2-GARAGEDOOROPENERSTORAGEBINDOOR
3-LATCHTABS

(4) Slidethe overheadconsole rearwardfarenough to disengage the two mounting hooks on the rear of the housing from the mounting holes in the inner roof panel (Fig. 5).

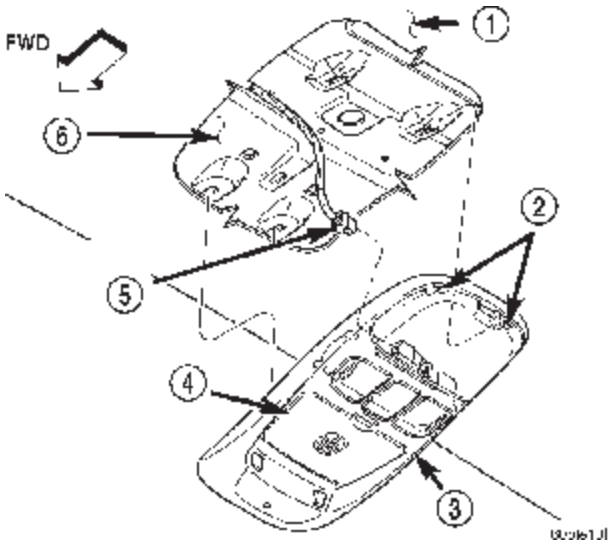

Fig. 5 Overhead Console Remove/Install

1-HEADLINER
2-MOUNTINGHOOKS
3-OVERHEADCONSOLE
4-GARAGEDOOROPENERSTORAGEBINDOOR
5-WIREHARNESSCONNECTOR
6-INNERROOFPANEL

(5) Lower the overhead console from the headliner far enough to access the wire harness connector.

(6) Disconnect the roof wire harness connector from theoverhead console wire harness connector.

OVERHEAD CONSOLE (Continued)

(7) Remove the overhead console from the vehicle.

OVERHEAD CONSOLE DISASSEMBLY

GARAGEDOOROPENERSTORAGEBINREMOVAL

(1) Disconnect and isolate the battery negative cable.

(2) Remove the overhead console from the headliner. Refer to **Overhead Console** in the Removal and Installation section of this group for the procedures.

(3) If the vehicle is so equipped, remove the three screws that secure the compass mini-trip computer moduleto the back sideof the overheadconsole housing. Move the module aside as needed for access to the pivot latches that are integral to the overhead console housing for the garage door opener storage bin door pivot pins.

(4) Open the garage door opener storage bindoor.

(5) From the back sideoftheoftheoverheadconsole housing, gentlypryoneofthepivotlatches(Fig. 6) forward while pulling the garage door opener storage bin door pivot arm rearward until the pivot pin is disengaged from the latch. Repeat thissteptodisengage the second pivot pin from its pivot latch.

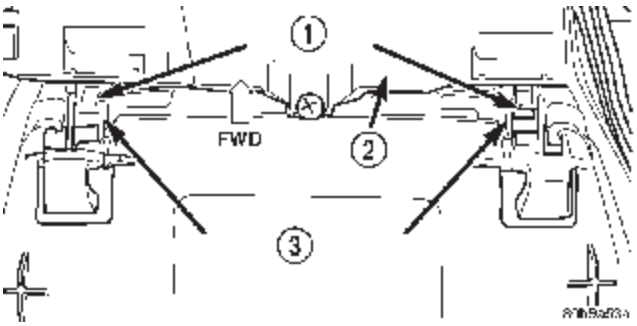

Fig. 6 Garage Door Opener Storage Bin Door Pivot Latches

1-PIVOTLATCHES
2-COMPASSMINI-TRIPCOMPUTERMODULE
3-GARAGEDOOROPENERSTORAGEBINDOORPIVOT ARMS

(6) From the face side of the overhead console housing, remove the garage door opener storage bin door from the storage bin.

SUNGLASSSTORAGEBINREMOVAL

(1) Remove the overhead console from the headliner. Refer to **Overhead Console** in the Removal and Installation section of this group for the procedures.

(2) Remove the fourscrewsthatsecurethereading and courtesy lamp housing to the back side of the overhead console housing. Move the lamp housing aside as needed for access to the pivot latches that are integral to the overhead console housing for the sunglassesstorage bin pivot pins.

(3) Open the sunglasses storage bin.

(4) From the back sideoftheoftheoverheadconsole housing, gently pry one of the pivot latches forward while pulling the sunglasses storage bin pivot arm rearward until the pivot pin is disengaged from the latch. Repeat this step to disengage the second pivot pin from its pivot latch.

(5) From the face side of the overhead console housing, remove the sunglasses storage binfrom the overhead console.

COMPASS MINI-TRIP LENS REMOVAL

Overheadconsoles equipped with the optional compass mini-trip computer have a lens installed in the front of the overhead console housing through which the Vacuum-Fluorescent Display can be viewed. If the overhead console is not equipped with the compass mini-trip computer option, a plastic cover plug is installedinthe front of theoverhead console housing in place of the lens.

(1) Remove the overhead console from the headliner. Refer to **Overhead Console** in the Removal and Installation section of this group for the procedures.

(2) If the vehicle is so equipped, remove the compass mini-trip computer module from the overhead console. Refer to **Compass Mini-Trip Computer** in theRemovaland Installation section of thisgroup for the procedures.

(3) From the back side of the overhead console, pushdownward firmly and evenly on the rear of the trip computer lens to disengage the rear mounting boss,orthesnapfeaturesofthe cover plug from the overhead console housing.

(4) From the face of theoverhead console, pull the trip computer lens or the cover plug rearward far enough to disengage thefour forward mounting tabs from theoverhead console housing.

(5) Remove the trip computer lens or the cover plug from the overhead console housing.

OVERHEAD CONSOLE ASSEMBLY

GARAGE DOOR OPENER STORAGE BIN

(1) From the face side of the overhead console housing, position the garage door opener storage bin doorpivotarms through theopenings in thefront of the storage bin.

(2) From the back sideoftheoftheoverheadconsole housing, align oneofthepivot pins ofthegarage door opener storage bin door with the pivot latch integral to the overhead console housing. Press the pivot armforward until the pivot pin is engaged in

OVERHEAD CONSOLE (Continued)

the latch. Repeat thisstep to engage the second pivot pin with its pivot latch.

(3) Close the garage door opener storage bin door.

(4) If the vehicle is so equipped, position the compass mini-trip computer module to the back side of the overhead console housing. Install and tighten the three screws that secure the module to the housing. Tighten the screws to 2.2 N·m (20 in.lbs.).

(5) Install the overhead console onto the headliner. Refer to **Overhead Console** in the Removal and Installation section of this group for the procedures.

SUNGLASS STORAGE BIN

(1) From the face side of the overhead console housing, position the sunglasses storage bin pivot arms through the openings in the front of the storage bin housing in the overhead console.

(2) From the back side of the overhead console housing, align one of the pivot pins of the sunglasses storage bin with the pivot latch integral to the overhead console housing. Press the pivot arm forward until the pivot pin is engaged in the latch. Repeat this step to engage the second pivot pin with its pivot latch.

(3) Close the sunglasses storage bin.

(4) Position the reading and courtesy lamp housing to the back side of the overhead console housing. Install and tighten the four screws that secure the lamp housing to the back of the overhead console housing. Tighten the screws to 2.2 N·m (20 in.lbs.).

(5) Install the overhead console onto the headliner. Refer to **Overhead Console** in the Removal and Installation section of this group for the procedures.

MINI-TRIP COMPUTER LENS

Overhead consoles equipped with the optional compass mini-trip computer have a lens installed in the front of the overhead console housing through which the Vacuum-Fluorescent Display can be viewed. If the overhead console is not equipped with the compass mini-trip computer option, a plastic cover plug is installed in the front of the overhead console housing in place of the lens.

(1) Remove the trip computer lens or the cover plug onto the overhead console housing.

(2) From the face of the overhead console, push the trip computer lens or the cover plug forward far enough to engage the four forward mounting tabs in the overhead console unit.

(3) From the face of the overhead console, align the rear mounting boss of the trip computer lens or the alignment pin of the cover plug with the receptacle in the overhead console housing.

(4) Press firmly and evenly on the rear edge of the trip computer lens or the cover plug until the rear mounting boss is fully seated in the receptacle, or the snap features of the cover plug are fully engaged in the overhead console housing.

(5) If the vehicle is so equipped, install the compass mini-trip computer module onto the overhead console. Refer to **Compass Mini-Trip Computer** in the Removal and Installation section of this group for the procedures.

(6) Install the overhead console onto the headliner. Refer to **Overhead Console** in the Removal and Installation section of this group for the procedures.

INSTALLATION

(1) Position the overhead console near the mounting location on the headliner in the vehicle.

(2) Reconnect the roof wire harness connector to the overhead console wire harness connector.

(3) Engage the two mounting hooks on the rear of the overhead console housing in the mounting holes in the inner roof panel.

(4) Slide the overhead console forward far enough to align the two latches on the front of the housing with their receptacles in the inner roof panel.

(5) Push upward firmly and evenly on the front of the overhead console until each of the two latches is fully engaged in its receptacle in the inner roof panel.

(6) Close the garage door opener storage bin door.

(7) Reconnect the battery negative cable.

SPECIAL TOOLS

OVERHEAD CONSOLE SYSTEMS

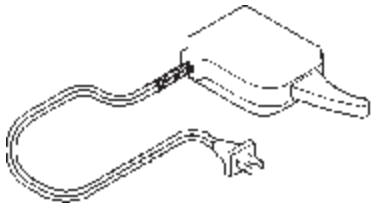

Degaussing Tool 6029

COMPASS/MINI-TRIP COMPUTER

DESCRIPTION

The compass mini-trip computer is located in the premium overhead console on models equipped with this option. Two compass mini-trip computer units are available. One unit is used on vehicles not equipped with the Vehicle Theft Security System (VTSS) option, and the other is used on vehicles with the VTSS option. Both compass mini-trip computer units include the electronic control module, a Vacuum-Fluorescent Display (VFD), a compass flux-gate unit and two push button function switches.

COMPASS/MINI-TRIP COMPUTER (Continued)

Compass mini-trip computer units for vehicles equipped with the VTSS include a red Light-Emitting Diode (LED) on their electronic circuit board. This LED protrudes through the bottom of the lens on the front of the overhead console unit, and serves as the security indicator lamp. Refer to **Security Indicator Lamp** in Vehicle Theft/Security Systems for more information on this feature.

The compass mini-trip computer modulecontains a central processing unit and interfaces with other electronic modules in thevehicle on theChrysler Collision Detection (CCD) data bus network. The CCD data bus network allows the sharing of sensor information.Thishelpstoreducewireharnesscomplexity, reduce internalcontrollerhardware, and reduce component sensor current loads. At the same time, this system provides increased reliability, enhanced diagnostics, andallows the addition of many new feature capabilities.

The compass mini-trip computer provides several electronic functions and features. Some of the functions and features that the compass mini-trip computer module supports and/or controls, include the following display options:

- **Compass andtemperature** - provides the outside temperature and one of eight compass readings to indicate the direction the vehicle is facing.
- **Compass and compass in degrees** - provides one of eight compass readings to indicate the direction the vehicle is facing and provides the compass direction in degrees.
- **Trip odometer (ODO)** - shows the distance travelled since the last trip computerreset.
- **Average fuel economy (AVG ECO)** - shows the averagefuel economy sincethelasttripcomputer reset.
- **Instant fuel economy (ECO)** - shows the present fuel economybasedupon the current vehicle distance and fuel used information.
- **Distance to empty (DTE)** - shows the estimated distance that can be travelled with the fuel remaining in the fuel tank. This estimated distance is computed using the average miles-per-gallon from the last 30 gallons of fuel used.
- **Elapsed time (ET)** - shows the accumulated ignition-on time since the last trip computer reset.
- **Blank screen** - the compass mini-trip VFD is turned off.

The ambient temperature sensor is hard wired to the compass mini-trip computer module. Data input for all other compass mini-trip computer functions, including VFD dimming level, is received through CCDdatabusmessages.Thecompassmini-trip computer uses its internalprogrammingand all of these inputs to calculate anddisplay the requested data. If thedatadisplayed is incorrect, perform the self-diagnostic tests as described in this group. If these tests prove inconclusive, the use of a DRBIII® scan tool and the proper Diagnostic Procedures manual are recommended for further testing of the compass mini-trip computer module and the CCD data bus.

The compass mini-trip computer module cannot be repaired, and is availableforservice onlyas a unit.If faulty or damaged, the complete module must be replaced.

OPERATION

Thecompassmini-trip computer only operateswith theignitionswitchintheOnposition.Whentheignition switch is turned to the On position, all of the segments in the compass mini-trip computer VFD will be turned on for one second, then the display willreturntothelast function beingdisplayedbefore the ignition was turned to the Off position. With the ignition switch in the On position, momentarily depressing andreleasingthe Steppushbuttonswitch will cause the compass-mini-trip computer to change its mode of operation, and momentarily depressing and releasing the U.S./Metric push button will cause the unit to toggle between U.S. and Metric measurements. While in either compass mode, depressing the U.S./Metric push button for more than ten seconds will toggle the display between the compass/temperature and the compass/compass in degrees modes.

This compass mini-trip computer features several functions thatcanbereset.IfboththeStepandU.S./Metricpush buttons are depressed at the same time with the ignition switch in the On position, the trip computer information that can be reset is reset. Depressing and releasing the Step and U.S./Metric push buttons at the same time for more than 100 milliseconds, but not more than one second while in any display mode (except the compass/temperature mode) will cause a local reset. A local reset affects only the function currently displayed. See the Reset Chart below for more information on this feature. Performing a local reset while in the compass/temperature mode enters the module into the compass variance setting mode.

Depressing and releasing the Step and U.S./Metric push buttons at the same time for more than two seconds while in any display mode (except the compass/temperature mode) will cause a global reset. A global reset changes all of the trip computer functions that can be reset.

For more information on the features and control functions of the compass mini-trip computer, see the owner's manual in the vehicle glove box.

COMPASS/MINI-TRIP COMPUTER (Continued)

DIAGNOSIS & TESTING - COMPASS MINI-TRIP COMPUTER

If the problem with the compass mini-trip computer module is an inoperative security indicator lamp, refer to **Security Indicator Lamp** in Vehicle Theft/Security Systems. If the problem with the compass mini-tripcomputer module isan"OC"or"SC"in the compass/thermometer display, refer to **Ambient Temperature Sensor** in the Diagnosis and Testing section of this group. If the problem with the compass mini-trip computer module is an inaccurate or scrambled display, refer to **Self-Diagnostic Test** in the Diagnosis and Testingsection ofthisgroup.Ifthe problemwiththe compass mini-tripcomputer module is incorrect Vacuum Fluorescent Display (VFD) dimming levels, use a DRB® scan tool and the proper Diagnostic Procedures manual to test for the correct dimming message inputs being received from the instrument cluster over the Chrysler Collision Detection (CCD) data bus. If the problem is a no-display condition, use the following procedures. For complete circuit diagrams, refer to **Overhead Console** in the Contents of Wiring Diagrams.

(1) Check the fused B(+) fuseinthejunctionblock. If OK, go toStep 2. If notOK,repairtheshortedcircuit or component as required and replace the faulty fuse.

(2) Check for batteryvoltage atthefusedB(+)fuse in the junction block. If OK, go to Step 3. If not OK, repair the open fused B(+) circuit to the battery as required.

(3) Check the fused ignition switch output (run/start) fuse in the junction block. If OK, go to Step 4. If notOK,repairtheshortedcircuit orcomponent as required and replace the faulty fuse.

(4) Turn the ignition switch to the On position. Check for batteryvoltageat the fusedignitionswitch output (run/start) fuse in the junction block. If OK, go toStep 5.IfnotOK,repairtheopenfusedignition switch output (run/start)circuitto the ignition switch as required.

(5) Turn the ignition switch to the Off position. Disconnect and isolate the battery negative cable. Remove the overhead console. Check for continuity between the ground circuit cavities of the roof wire harness connector for the overhead console and a good ground. Thereshould be continuity. If OK, go to Step 6. If not OK, repair the open ground circuit to ground as required.

(6) Connect the battery negative cable. Check for battery voltage at the fused B(+) circuit cavityofthe roof wire harness connector for theoverhead console. If OK, go to Step 7. If not OK, repair the openfused B(+) circuit to the junction blockfuse as required.

(7) Turn the ignition switch to the On position. Checkforbattery voltage atthefusedignitionswitch output (run/start) circuit cavity of the roof wire harness connector for the overhead console. If OK, refer to **Self-Diagnostic Test** in the Diagnosis and Testing section of this groupforfurther diagnosis of the compass mini-trip computer module and the CCD data bus. If not OK, repair the open fused ignition switchoutput (run/start) circuit to the junction block fuse as required.

SELF-DIAGNOSTIC TEST

Aself-diagnostic test is used to determine that the compass mini-trip computer module is operating properly electrically. Initiate the self-diagnostic test as follows:

(1) With the ignition switch in the Off position, simultaneously depress and holdtheStepbuttonand the U.S./Metric button.

(2) Turn the ignition switch to the On position.

(3) Continue to hold both buttons depressed until the compass mini-trip computer module enters the display segment test. In this test, all of the Vacuum Fluorescent Display (VFD) segments are lighted while the compass mini-trip computer module performs the following checks:

- Microprocessor RAM read/write test
- Non-volatile memory read/write test
- Microprocessor ROM verification test
- CCD communications test.

(4) Following completion of these tests, the compass mini-trip computer will display one of three messages: "PASS," "FAIL," or "CCd." Respond to the respective test results as follows:

- Ifthe"PASS"messageis displayed, but compass mini-trip computer operation is still improper, the use of a DRB scan tool and the proper Diagnostic Procedures manual are required for further diagnosis.
- Ifthe "FAIL" message is displayed, the compass mini-trip computer module is faulty and must be replaced.
- If the "CCd" message is displayed, the use of a DRB® scan tool and the proper Diagnostic Procedures manual are required for further diagnosis.
- If any VFD segment should fail to light during the display segment test, the compass mini-trip computer module is faulty and must be replaced.

(5) If all tests are passed, or if the ignition switch is turned to the Off position, the compass mini-trip computer module willautomaticallyreturnto normal operation.

COMPASS/MINI-TRIP COMPUTER (Continued)

NOTE: If the compass functions, but accuracy is suspect, it may be necessary to perform a variation adjustment. This procedure allows the compass unit to accommodate variations in the earth's magnetic field strength, based on geographic location. Refer to Compass Variation Adjustment in the Service Procedures section of this group.

NOTE: If the compass reading has blanked out, and only "CAL" appears in the display, demagnetizing may be necessary to remove excessive residual magnetic fields from the vehicle. Refer to Compass Demagnetizing in the Service Procedures section of this group.

REMOVAL

(1) Disconnect and isolate the battery negative cable.

(2) Remove the overhead console from the headliner. Refer to **Overhead Console** in the Removal and Installation section of this group for the procedures.

(3) Remove the three screws that secure the compass mini-trip computer module to the overhead console housing (Fig. 7).

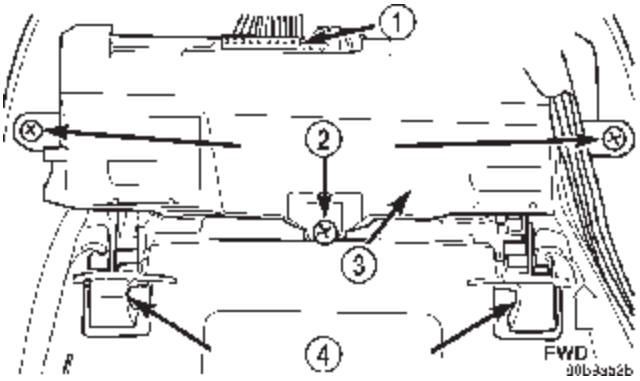

Fig. 7 Compass Mini-Trip Computer

1-WIREHARNESSCONNECTOR
2-SCREWS(3)
3-COMPASSMINI-TRIPCOMPUTERMODULE
4-FRONTLATCHES

(4) Pull the compass mini-trip computer module away from the overhead console far enough to access the wire harness connector.

(5) Disconnect the overhead console wire harness connector from the compass mini-trip computer module connector receptacle.

(6) Remove the compass mini-trip computer module from the overhead console housing.

INSTALLATION

(1) Position the compass mini-trip computer module onto the overhead console housing.

(2) Reconnect the overhead console wire harness connector to the compass mini-trip computer module connector receptacle.

(3) Install and tighten the three screws that secure the compass mini-trip computer module to the overhead console housing. Tighten the screws to 2.2 N·m (20 in. lbs.).

(4) Install the overhead console onto the headliner. Refer to **Overhead Console** in the Removal and Installation section of this group for the procedures.

(5) Reconnect the battery negative cable.

NOTE: If a new compass mini-trip computer has been installed, the compass will have to be calibrated and the variance set. Refer to Compass Variation Adjustment and Compass Calibration in the Service Procedures section of this group for the procedures.

AMBIENT TEMP SENSOR

DESCRIPTION

Ambient air temperature is monitored by the compass mini-trip computer module through the ambient temperature sensor. The ambient temperature sensor is a variable resistor mounted to a bracket that is secured with a screw to the underside of the hood panel near the hood latch striker in the engine compartment.

For complete circuit diagrams, refer to **Overhead Console** in the Contents of Wiring Diagrams. The ambient temperature sensor cannot be adjusted or repaired and, if faulty or damaged, it must be replaced.

OPERATION

The ambient temperature sensor is a variable resistor that operates on a five-volt reference signal sent to it by the compass mini-trip computer module. The resistance in the sensor changes as temperature changes, changing the return circuit voltage to the compass mini-trip computer module. Based upon the resistance in the sensor, the compass mini-trip computer module senses a specific voltage on the return circuit, which it is programmed to correspond to a specific temperature.

AMBIENT TEMP SENSOR (Continued)

DIAGNOSIS & TESTING - AMBIENT TEMPERATURESENSOR

The thermometer function is supported by the ambienttemperature sensor, a wiring circuit, and a portion of the compass mini-trip computermodule.If any portion of the ambient temperature sensor circuit fails, the compass/thermometer display function will self-diagnose the circuit. If 55° C (131° F) appears in the display, the sensorisbeingexposedto temperatures above 55° C (131° F), or the sensorcircuit isshorted.If–40° C (–40° F) appears in thedisplay, the sensor is being exposed to temperatures below –40° C (–40° F), or the sensor circuit is open.

The ambienttemperature sensorcircuitcanalsobe diagnosed using the following Sensor Test, and Sensor Circuit Test. If the temperature sensor and circuit are confirmed to be OK, but the temperature display is inoperative or incorrect, refer to **Compass Mini-Trip Computer** in the Diagnosis and Testing section of this group. For complete circuit diagrams, refer to **Overhead Console** in the Contents of Wiring Diagrams.

SENSOR TEST

(1) Turn the ignition switch to the Off position. Disconnect and isolate the battery negative cable. Disconnect the ambienttemperature sensor wireharness connector.

(2) Measure the resistance of the ambient temperature sensor. At –40° C (–40° F), the sensor resistance is 336 kilohms. At 55° C (131° F), the sensor resistance is 2.488 kilohms. The sensor resistance should readbetweenthese two values. If OK, refer to **Sensor Circuit Test** in the Diagnosis and Testing section of this group. If not OK, replace the faulty ambient temperature sensor.

SENSOR CIRCUITTEST

(1) Turn the ignition switch to the Off position. Disconnect and isolate the battery negative cable. Disconnect the ambienttemperature sensor wireharness connector and the overhead console wire harness connector.

(2) Connect a jumper wire between the two terminals in thebodyhalfoftheambienttemperaturesensor wire harness connector.

(3) Checkforcontinuity between the sensorreturn circuit and the ambient temperature sensor signal circuitcavitiesoftheroofwireharnessoverheadconsole connector. There should be continuity. IfOK,go to Step 4. If not OK, repair the open sensor return circuit or ambient temperature sensor signal circuit to the ambient temperature sensor as required.

(4) Remove the jumper wire from the body half of the ambient temperature sensor wire harness connector. Check for continuity between the sensor return circuit cavity of the roof wire harness overhead console connector and a good ground. There should be no continuity. If OK, go to Step 5. If not OK, repair the shorted sensor return circuit as required.

(5) Check forcontinuitybetweentheambient temperature sensor signal circuit cavity of the roof wire harness overhead console connector and a good ground. Thereshouldbe no continuity.If OK, refer to **Compass Mini-Trip Computer** in the Diagnosis and Testing section of this group. If not OK, repair the shorted ambient temperature sensor signal circuit as required.

REMOVAL

(1) Disconnect and isolate the battery negative cable.

(2) Locate the ambient temperature sensor, on the underside of the hood near the hood latch striker (Fig. 8).

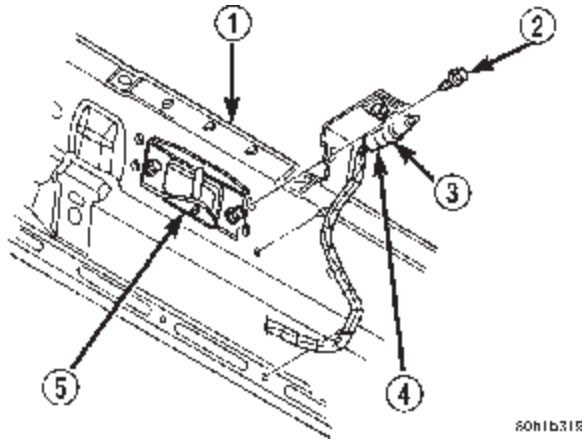

Fig. 8 Ambient Temperature Sensor Remove/Install

1-HOOD
2-SCREW
3-SENSORANDBRACKET
4-WIREHARNESSCONNECTOR
5-HOODLATCHSTRIKER

(3) Disconnectthewireharnessconnectorfromthe ambient temperature sensorconnectorreceptacle.

(4) Remove the onescrewthatsecurestheambient temperature sensor bracket to the inner hood reinforcement.

(5) Remove the ambient temperature sensor from the inner hood reinforcement.

AMBIENT TEMP SENSOR (Continued)

INSTALLATION

(1) Position the ambient temperature sensor onto the inner hood reinforcement.

(2) Install and tighten the one screw that secures the ambient temperature sensor bracket to the inner hood reinforcement. Tighten thescrewto5.6N·m(50 in. lbs.).

(3) Reconnect the wire harness connector to the ambient temperature sensorconnectorreceptacle.

(4) Reconnect the battery negative cable.

8W-49 OVERHEAD CONSOLE

Component	Page
Ambient Temperature Sensor	8W-49-5
AutomaticDay/NightMirror	8W-49-3
Back-Up LampSwitch	8W-49-3
Central Timer Module C2	8 W-49-4
ControllerAntilockBrake	8 W-49-4
EngineControlModule	8W-49-4
Fuse 11(JB)	8W-49-3
Fuse 12(JB)	8W-49-2, 3, 6
G200	8W-49-2, 5
G201	8W-49-3, 6
Joint Connector No. 1	8W-49-3
Joint Connector No. 7	8W-49-4
Joint Connector No. 8	8W-49-2
JunctionBlock	8W-49-2,3,5,6
Left Visor/VanityLamp	8W-49-6
Map Lamps	8W-49-2
OverheadConsole	8W-49-2, 3, 4, 5, 6
Park/Neutral Position Switch	8W-49-3
Powertrain ControlModule	8W-49-4
Right Visor/Vanity Lamp	8W-49-6

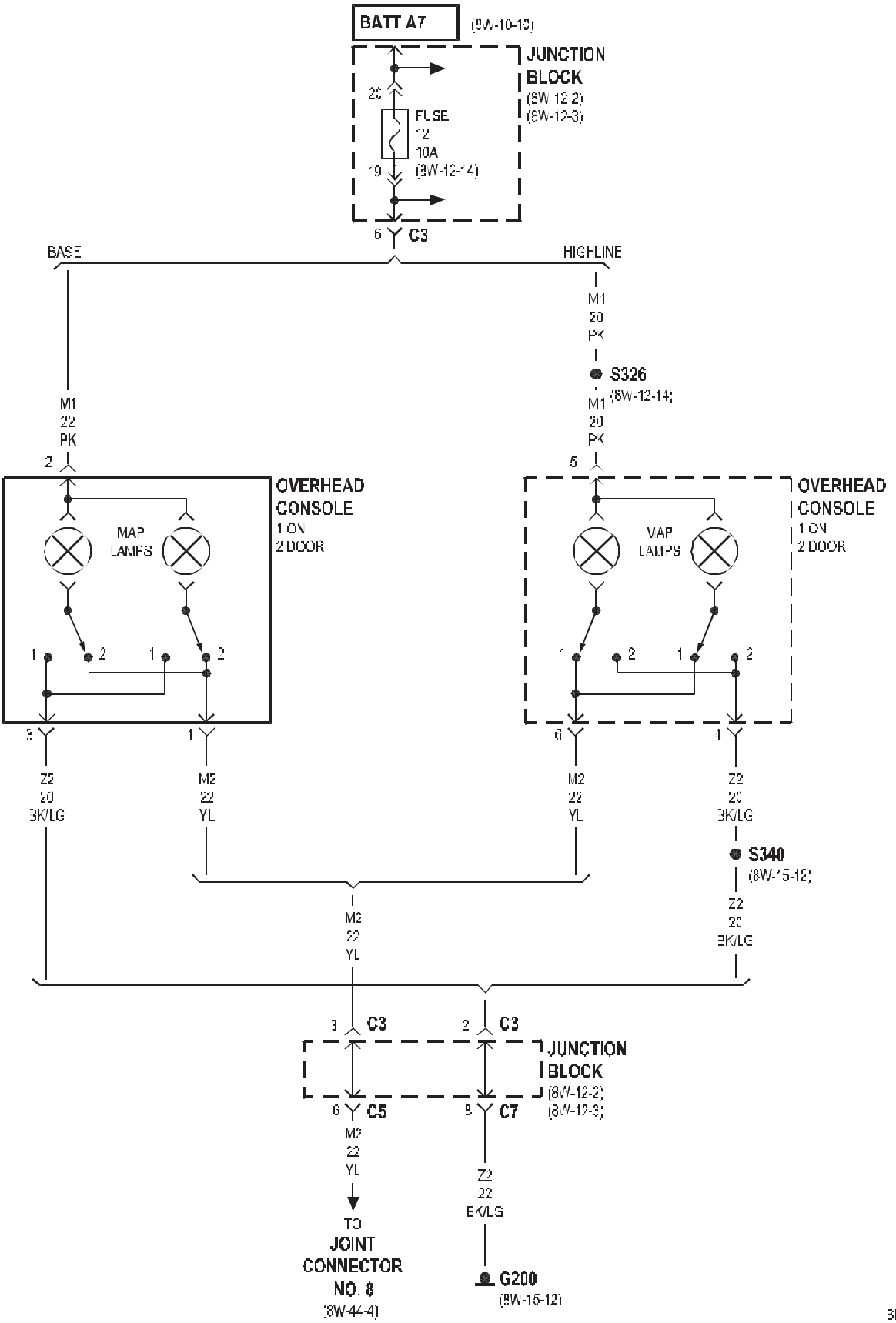
BATT A7
(8W-10-13)
JUNCTION BLOCK
(8W-12-2)
(8W-12-3)
20
FUSE 12 10A
19
(8W-12-14)
6
C3
BASE
HIGHLINE
M1 22 PK
2
OVERHEAD CONSOLE 1 ON 2 DOOR
MAP LAMPS
1
2
3
1
Z2 20 BK/LG
M2 22 YL
M1 20 PK
S326
(8W-12-14)
5
6
1
Z2 20 BK/LG
S340
(8W-15-12)
M2 22 YL
3
C3
2
C3
JUNCTION BLOCK
(8W-12-2)
(8W-12-3)
6
C5
8
C7
M2 22 YL
TO JOINT CONNECTOR NO. 8
(8W-44-4)
Z2 22 BK/LG
G200
(8W-15-12)

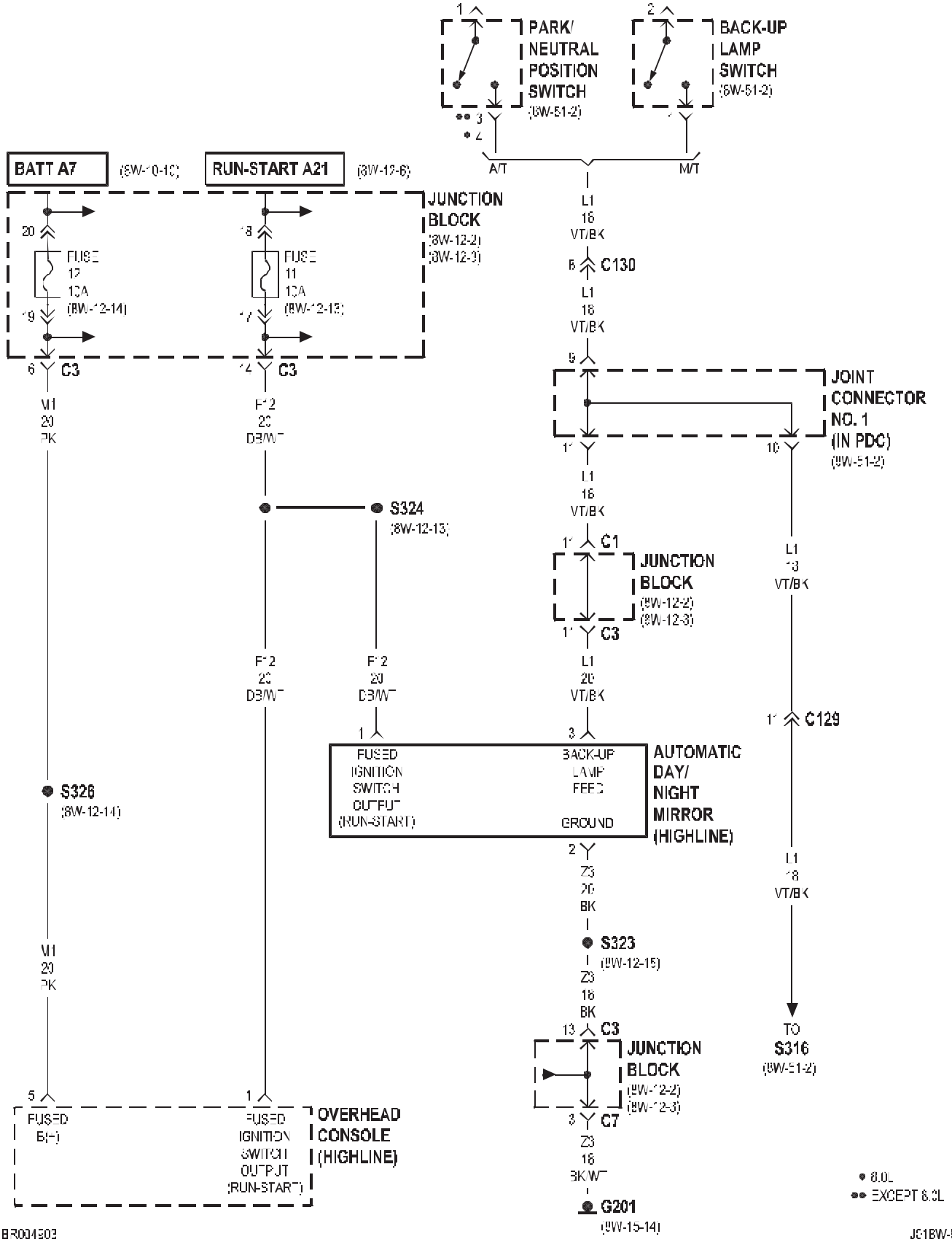
PARK/ NEUTRAL POSITION SWITCH (8W-51-2)
BACK-UP LAMP SWITCH (8W-51-2)
A/T
M/T
BATT A7 (8W-10-10)
RUN-START A21 (8W-10-6)
JUNCTION BLOCK (8W-12-2) (8W-12-3)
FUSE 12 10A (8W-12-14)
FUSE 11 10A (8W-12-13)
C3
C130
JOINT CONNECTOR NO. 1 (IN PDC) (8W-51-2)
S324 (8W-12-13)
C1
JUNCTION BLOCK (8W-12-2) (8W-12-3)
C129
S326 (8W-12-14)
FUSED IGNITION SWITCH OUTPUT (RUN-START)
BACK-UP LAMP FEED
GROUND
AUTOMATIC DAY/ NIGHT MIRROR (HIGHLINE)
S323 (8W-12-15)
C7
TO S316 (8W-51-2)
FUSED B(+)
FUSED IGNITION SWITCH OUTPUT (RUN-START)
OVERHEAD CONSOLE (HIGHLINE)
G201 (8W-15-14)
• 8.0L
•• EXCEPT 8.3L

HIGHLINE

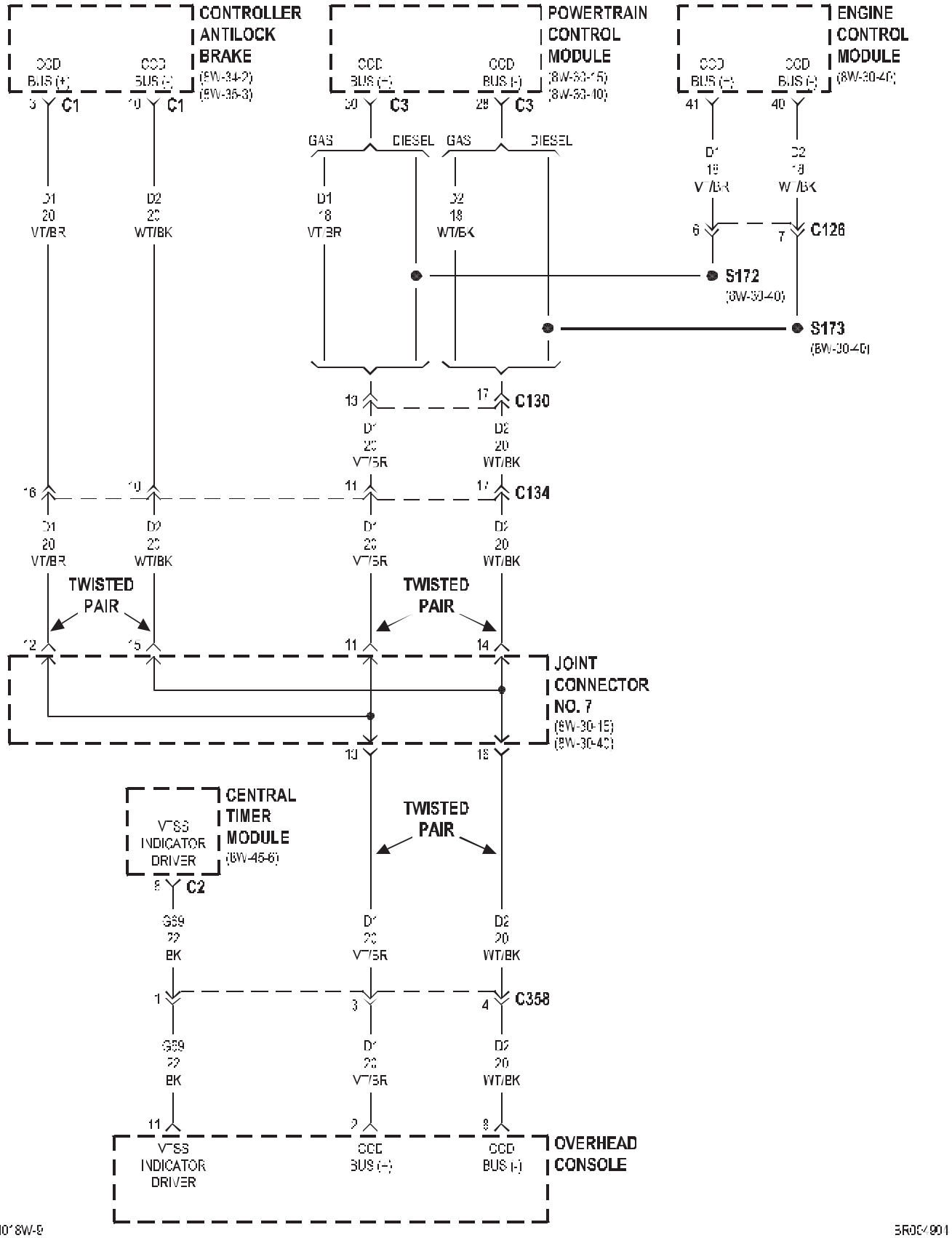
CONTROLLER ANTILOCK BRAKE
(8W-34-2)
(8W-35-3)
CCD BUS (+)
CCD BUS (-)
C1
POWERTRAIN CONTROL MODULE
(8W-33-5)
(8W-33-10)
C3
GAS
DIESEL
ENGINE CONTROL MODULE
(8W-30-40)
C126
S172
(8W-30-40)
S173
(8W-30-40)
C130
C134
TWISTED PAIR
JOINT CONNECTOR NO. 7
(8W-30-15)
(8W-30-42)
CENTRAL TIMER MODULE
(8W-45-6)
VSS INDICATOR DRIVER
C2
C358
OVERHEAD CONSOLE

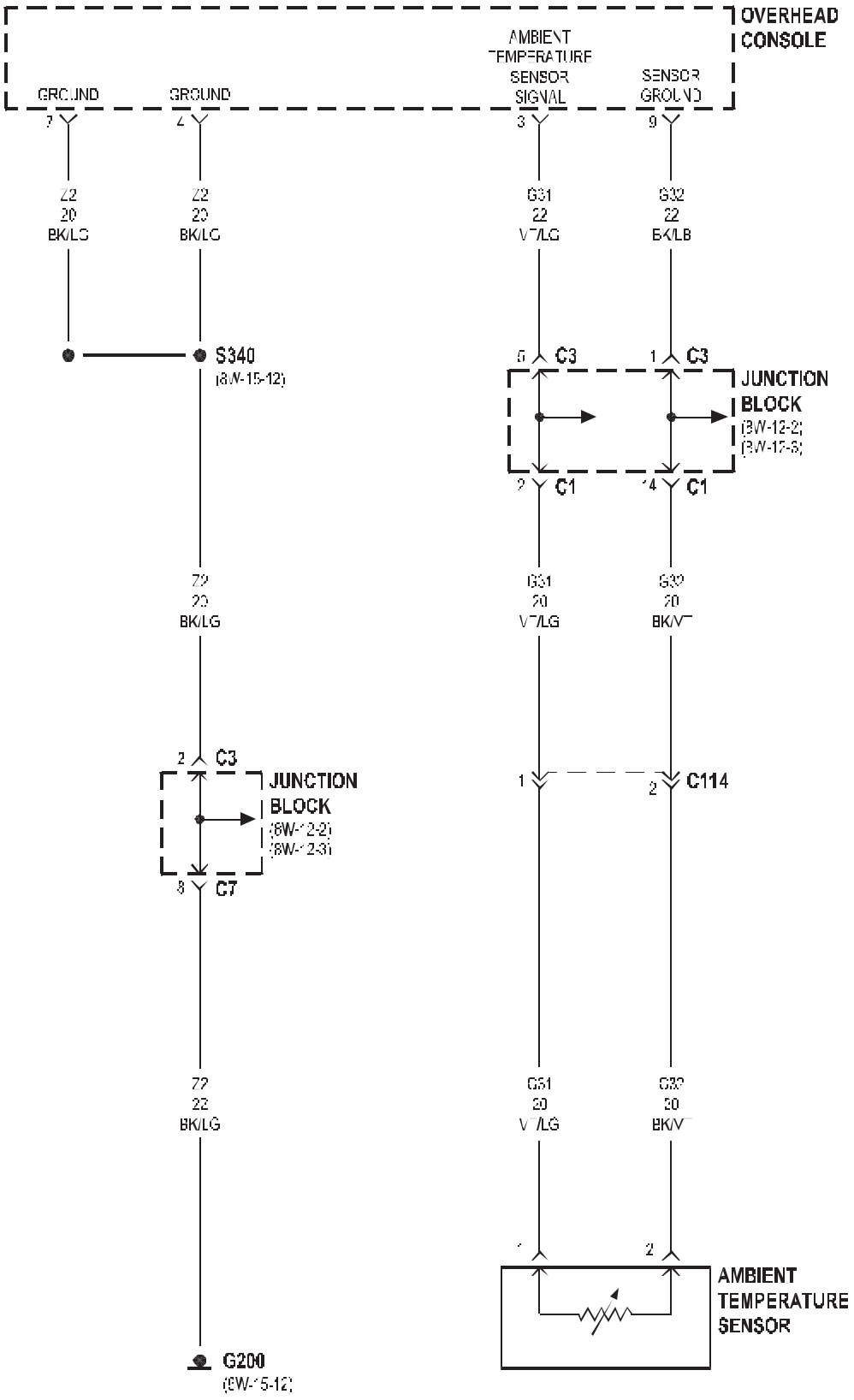
OVERHEAD CONSOLE
AMBIENT TEMPERATURE SENSOR SIGNAL
SENSOR GROUND
GROUND
GROUND
7
4
3
9
Z2 20 BK/LG
Z2 20 BK/LG
G31 22 VT/LG
G32 22 BK/LB
S340
(8W-15-12)
5 C3
1 C3
JUNCTION BLOCK
(8W-12-2)
(8W-12-3)
2 C1
14 C1
Z2 20 BK/LG
G31 20 VT/LG
G32 20 BK/VT
2 C3
JUNCTION BLOCK
(8W-12-2)
(8W-12-3)
8 C7
1
2 C114
Z2 22 BK/LG
G31 20 VT/LG
G32 20 BK/VT
1
2
AMBIENT TEMPERATURE SENSOR
G200
(8W-15-12)

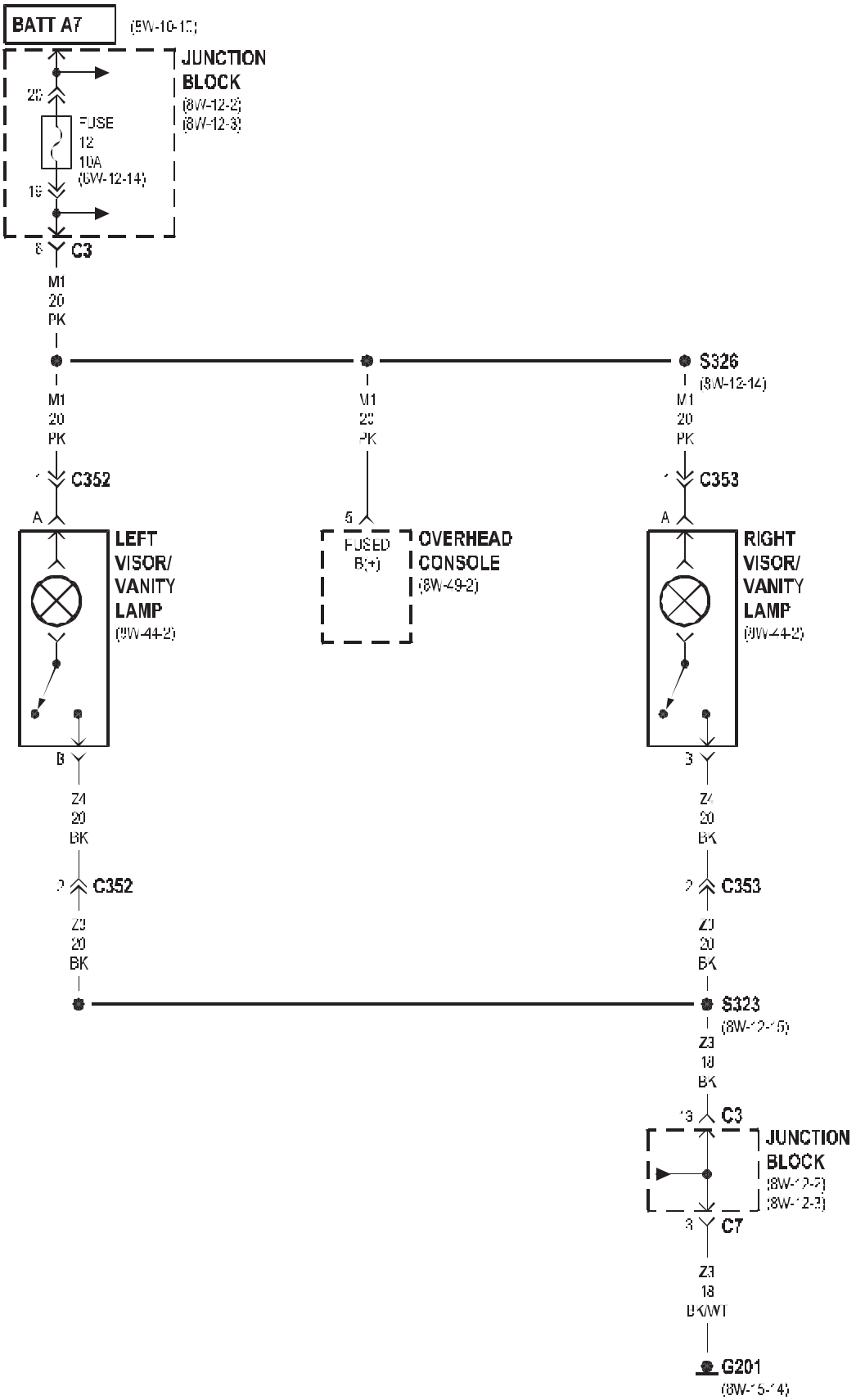
BATT A7
(8W-10-10)
JUNCTION BLOCK
(8W-12-2)
(8W-12-3)
20
FUSE 12 10A
(8W-12-14)
16
8
C3
M1 20 PK
S326
(8W-12-14)
M1 20 PK
C352
A
LEFT VISOR/ VANITY LAMP
(8W-44-2)
B
Z4 20 BK
C352
Z3 20 BK
5
FUSED B(+)
OVERHEAD CONSOLE
(8W-49-2)
C353
RIGHT VISOR/ VANITY LAMP
(8W-44-2)
3
Z4 20 BK
C353
Z3 20 BK
S323
(8W-12-15)
Z3 18 BK
13
C3
JUNCTION BLOCK
(8W-12-2)
(8W-12-3)
3
C7
Z3 18 BK/WT
G201
(8W-15-14)

CONNECTOR/GROUND LOCATIONS (Continued)

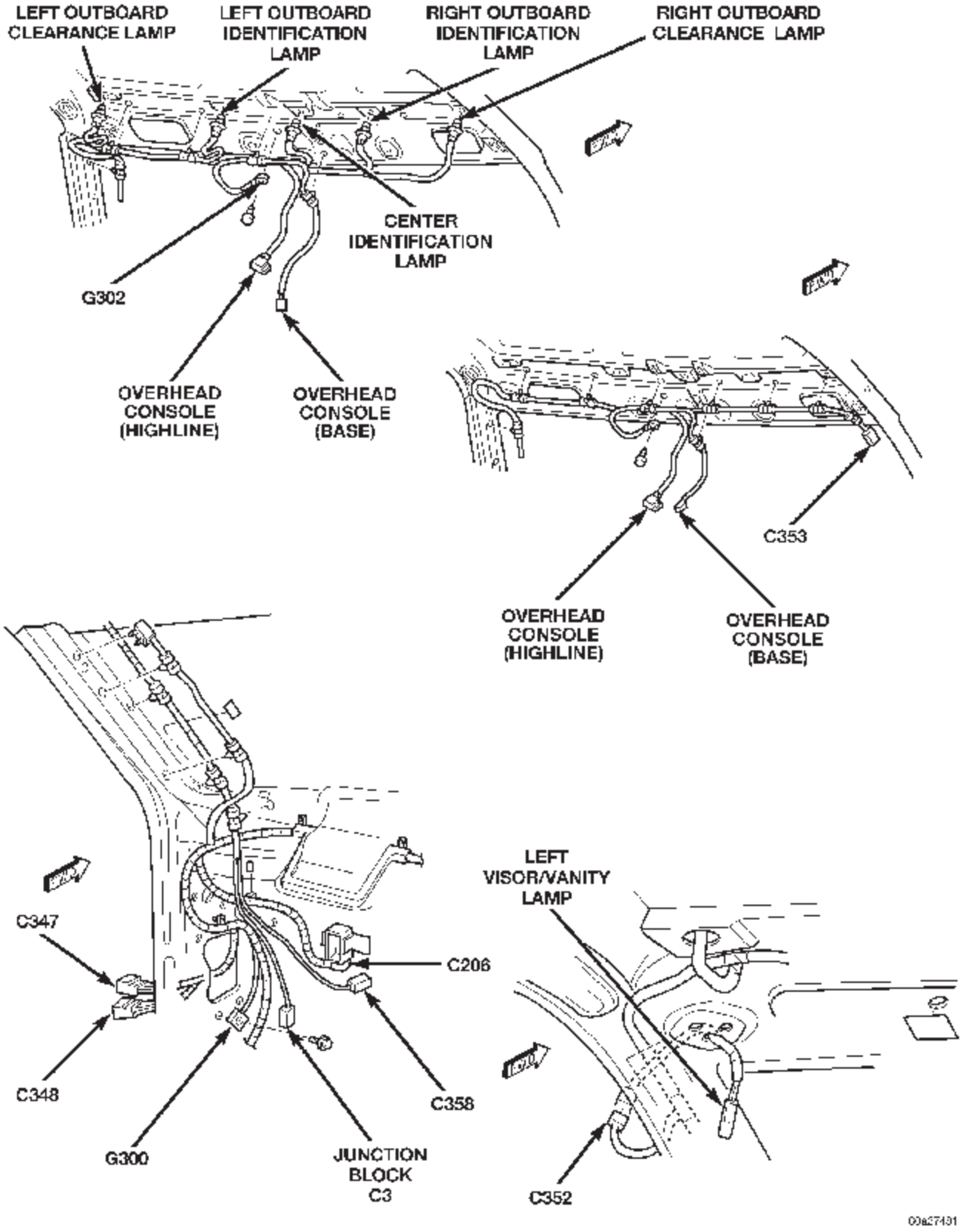

Fig. 20 OVERHEAD CONSOLE

CONNECTOR/GROUND LOCATIONS (Continued)

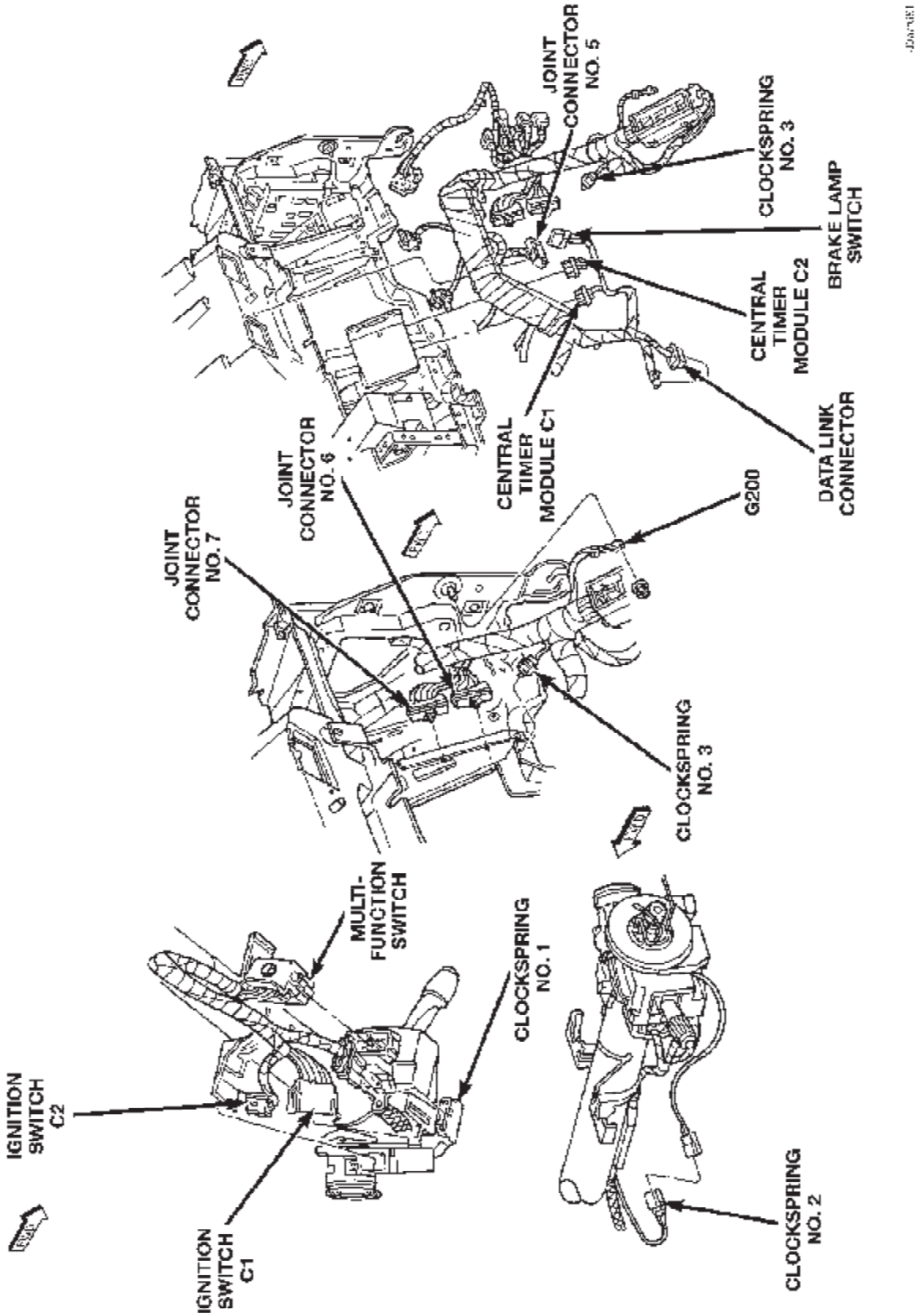

Fig. 24 STEERING COLUMN