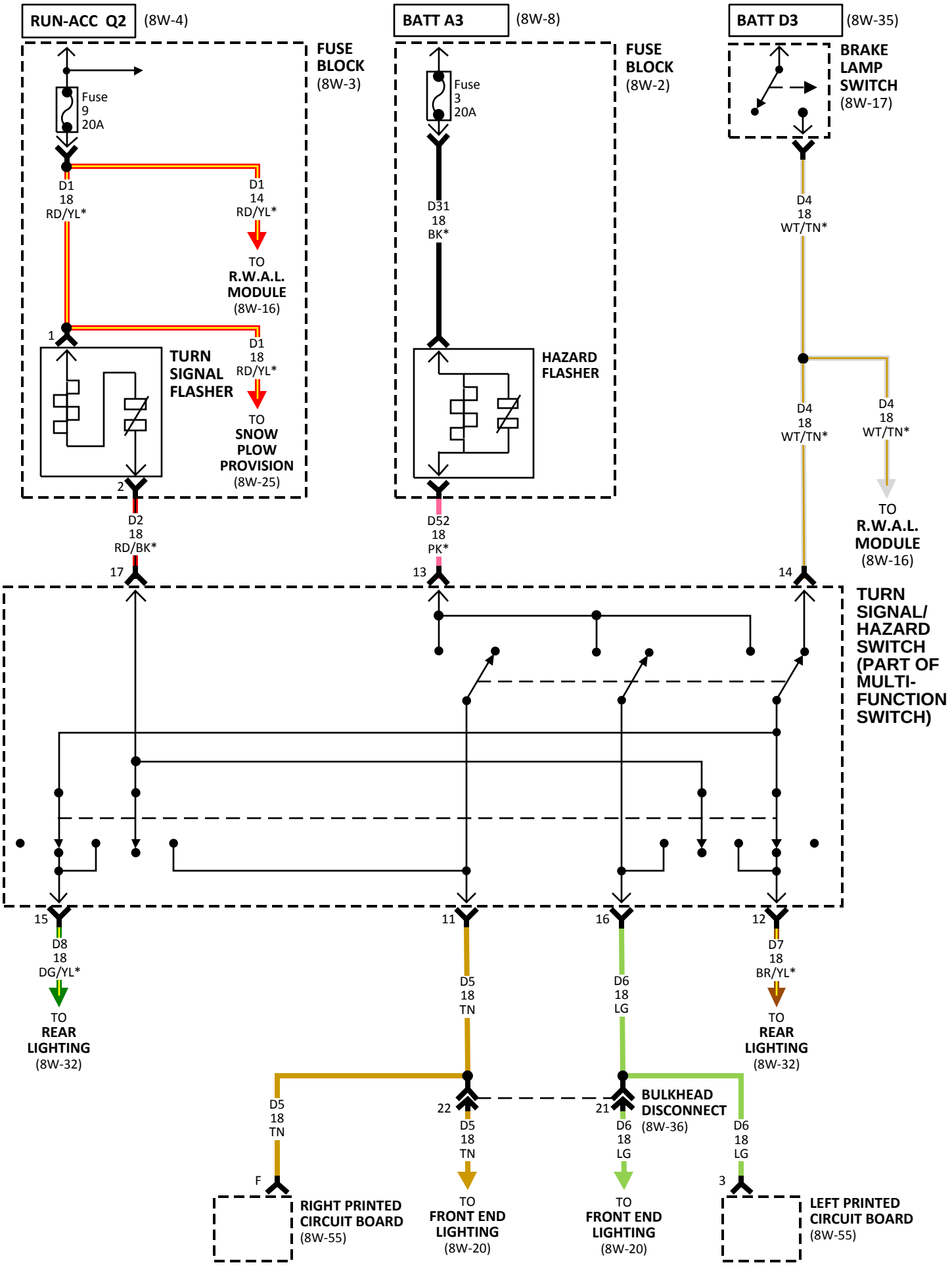
RUN-ACC Q2 (8W-4)
BATT A3 (8W-8)
BATT D3 (8W-35)
FUSE BLOCK (8W-3)
Fuse 9 20A
D1 18 RD/YL*
D1 14 RD/YL*
TO R.W.A.L. MODULE (8W-16)
1
TURN SIGNAL FLASHER
D1 18 RD/YL*
TO SNOW PLOW PROVISION (8W-25)
2
D2 18 RD/BK*
FUSE BLOCK (8W-2)
Fuse 3 20A
D31 18 BK*
HAZARD FLASHER
D52 18 PK*
BRAKE LAMP SWITCH (8W-17)
D4 18 WT/TN*
D4 18 WT/TN*
D4 18 WT/TN*
TO R.W.A.L. MODULE (8W-16)
17
13
14
TURN SIGNAL/ HAZARD SWITCH (PART OF MULTI-FUNCTION SWITCH)
15
11
16
12
D8 18 DG/YL*
TO REAR LIGHTING (8W-32)
D5 18 TN
D6 18 LG
D7 18 BR/YL*
TO REAR LIGHTING (8W-32)
D5 18 TN
22
D5 18 TN
TO FRONT END LIGHTING (8W-20)
21
D6 18 LG
BULKHEAD DISCONNECT (8W-36)
D6 18 LG
TO FRONT END LIGHTING (8W-20)
D6 18 LG
F
RIGHT PRINTED CIRCUIT BOARD (8W-55)
3
LEFT PRINTED CIRCUIT BOARD (8W-55)