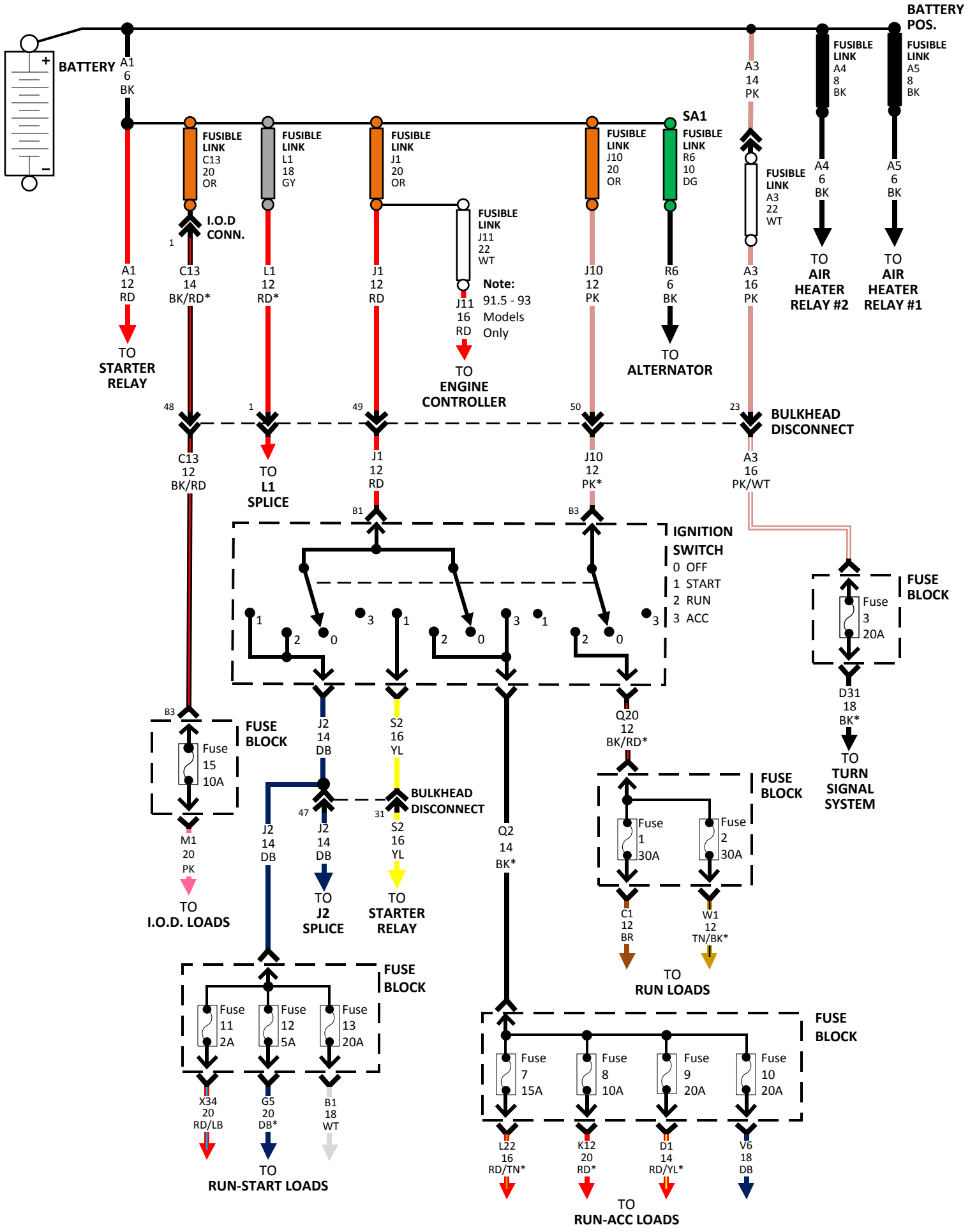
BATTERY
A1 6 BK
BATTERY POS.
FUSIBLE LINK A4 8 BK
FUSIBLE LINK A5 8 BK
A3 14 PK
SA1
FUSIBLE LINK C13 20 OR
FUSIBLE LINK L1 18 GY
FUSIBLE LINK J1 20 OR
FUSIBLE LINK J10 20 OR
FUSIBLE LINK R6 10 DG
FUSIBLE LINK A3 22 WT
I.O.D CONN.
FUSIBLE LINK J11 22 WT
A4 6 BK
A5 6 BK
TO AIR HEATER RELAY #2
TO AIR HEATER RELAY #1
A1 12 RD
TO STARTER RELAY
C13 14 BK/RD*
L1 12 RD*
J1 12 RD
J11 16 RD
Note: 91.5 - 93 Models Only
TO ENGINE CONTROLLER
J10 12 PK
R6 6 BK
TO ALTERNATOR
A3 16 PK
BULKHEAD DISCONNECT
C13 12 BK/RD
TO L1 SPLICE
J1 12 RD
J10 12 PK*
A3 16 PK/WT
IGNITION SWITCH
0 OFF
1 START
2 RUN
3 ACC
FUSE BLOCK
Fuse 3 20A
D31 18 BK*
TO TURN SIGNAL SYSTEM
FUSE BLOCK
Fuse 15 10A
M1 20 PK
TO I.O.D. LOADS
J2 14 DB
S2 16 YL
BULKHEAD DISCONNECT
J2 14 DB
J2 14 DB
S2 16 YL
TO J2 SPLICE
TO STARTER RELAY
Q2 14 BK*
Q20 12 BK/RD*
FUSE BLOCK
Fuse 1 30A
Fuse 2 30A
C1 12 BR
W1 12 TN/BK*
TO RUN LOADS
FUSE BLOCK
Fuse 11 2A
Fuse 12 5A
Fuse 13 20A
X34 20 RD/LB
G5 20 DB*
B1 18 WT
TO RUN-START LOADS
FUSE BLOCK
Fuse 7 15A
Fuse 8 10A
Fuse 9 20A
Fuse 10 20A
L22 16 RD/TN*
K12 20 RD*
D1 14 RD/YL*
V6 18 DB
TO RUN-ACC LOADS